UNIVERSITY of BRADFORD

# Computer Communications and Networks

## Access Control List (ACL)

# What is an ACL?

- **ACLs filter network traffic** based on packet header information.
- By default, routers have no ACLs configured.
- When an ACL is applied to an interface, the router evaluates all passing packets.
- ACLs consist of **permit or deny rules**, called **Access Control Entries (ACEs)**.
- **ACEs are processed sequentially**, and the router compares each packet against them.
- The process of filtering packets based on ACEs is known as **packet filtering**.

# Functions of ACLs

- **Optimise network performance** by limiting unnecessary traffic.
- **Control traffic flow** to enhance network efficiency.
- **Enhance security** by restricting unauthorised access.
- **Filter traffic** based on type, source, or destination.
- **Regulate host access** to specific network services.
- **Prioritise critical network traffic** for improved reliability.

# Key Features of ACLs

- **ACLs define rules for controlling traffic** entering, passing through, and exiting a router.
- Can be applied to **inbound** (before routing) or **outbound** (after routing) traffic.
- **Inbound ACLs** filter packets **before routing**, reducing processing overhead if discarded.
- **Outbound ACLs** filter packets **after routing**, regardless of the inbound interface.
- ACLs **do not affect packets originating from the router itself.**

# Operational Steps of an Inbound Standard IPv4 ACL

1. **Extract Source Address –** The router retrieves the **source IPv4 address** from the packet header.

2. **Sequential Rule Matching –** The router **compares** the source IP against **each ACE** in order.

3. **First Match Action –** If a match is found, the router **permits or denies** the packet, ignoring further ACEs.

4. **Implicit Deny –** If no match is found, the **packet is discarded** due to an **implicit deny rule** at the end.

5. **Hidden Implicit Deny –** The **last ACE in every ACL is an implicit deny**, even though it is not displayed in the configuration.

6. **At Least One Permit Rule Required –** Without a **permit statement**, the ACL will **block all traffic** due to the implicit deny.

# Understanding Wildcard Masks

- **Wildcard masks** are used in **ACLs** to determine which bits of an IPv4 address should be matched.

- Similar to **subnet masks,** wildcard masks use **ANDing** but work in **reverse:**
  - **Subnet Mask: 1 = Match, 0 = Ignore**
  - **Wildcard Mask: 0 = Match, 1 = Ignore**

- IPv4 **Access Control Entries (ACEs)** use a **32-bit wildcard mask** to specify matching rules.

- **Wildcard Mask Rules:**
  - **Bit 0** → **Match** the corresponding bit in the address.
  - **Bit 1** → **Ignore** the corresponding bit in the address.

# Understanding Wildcard Masks

| Wildcard Mask | Last Octet (in Binary) | Meaning (0 - match, 1 - ignore) |
|---|---|---|
| **0.0.0.0** | **00000000** | Match all octets. |
| **0.0.0.63** | **00111111** | •Match the first three octets<br>•Match the two left most bits of the last octet<br>•Ignore the last 6 bits |
| **0.0.0.15** | **00001111** | •Match the first three octets<br>•Match the four left most bits of the last octet<br>•Ignore the last 4 bits of the last octet |
| **0.0.0.248** | **11111100** | •Match the first three octets<br>•Ignore the six left most bits of the last octet<br>•Match the last two bits |
| **0.0.0.255** | **11111111** | •Match the first three octet<br>•Ignore the last octet |

# Configuring an ACL to Permit a Specific Host

- To **allow only** the host **192.168.1.1**, use a **wildcard mask of 0.0.0.0**.
- **Why?** In a wildcard mask, **0 = match** and **1 = ignore**.
- A **0.0.0.0** mask ensures that **every bit of the IP address must match exactly**.
- The resulting **Access Control Entry (ACE)** for **ACL 10**:

```
access-list 10 permit 192.168.1.1 0.0.0.0
```

This configuration **only permits traffic** from **192.168.1.1** and **blocks all others** (unless additional rules are added).

# Wildcard Mask to Match an IPv4 Subnet

- **Objective:** Configure an Access Control Entry (ACE) in ACL 10 to permit all hosts in the **192.168.1.0/24** network.

- **Wildcard Mask: 0.0.0.255**

  - **Explanation:** The wildcard mask 0.0.0.255 ensures that the first three octets (192.168.1) must match exactly, while the fourth octet is flexible, allowing any value.

- **ACE in ACL 10:**
  - Command:

```
access-list 10 permit 192.168.1.0 0.0.0.255
```

  - This ACE permits all hosts within the 192.168.1.0/24 network to access the resource.

# Wildcard Mask to Match an IPv4 Address Range

- **Objective:** Configure an Access Control Entry (ACE) in ACL 10 to permit all hosts in the IP range **192.168.16.0/24** to **192.168.31.0/24**.

- **Wildcard Mask: 0.0.15.255**

  - Ensures that the first two octets (192.168) remain fixed.
  - The third octet allows values from 16 to 31 (range covered by 0.0.15.255).
  - The fourth octet (255) allows all possible host addresses within each /24 subnet.
- **ACE in ACL 10:**
  - Command:

```
access-list 10 permit 192.168.16.0 0.0.15.255
```

  - This permits traffic from all hosts in subnets 192.168.16.0/24 to 192.168.31.0/24.

# Wildcard Mask Keywords

Cisco IOS provides two keywords to simplify wildcard masking:

- **`host`**
  - Replaces the **0.0.0.0** wildcard mask.
  - Ensures all bits of the IPv4 address must match exactly, allowing filtering of a single host.
  - Example: **`access-list 10 permit host 192.168.1.100`**
    - Equivalent to **`access-list 10 permit 192.168.1.100 0.0.0.0`**

- **`any`**
  - Replaces the **255.255.255.255** wildcard mask.
  - Matches **any** IPv4 address, effectively ignoring the entire address field.
  - Example: **`access-list 10 permit any`**
    - Equivalent to **`access-list 10 permit 0.0.0.0 255.255.255.255`**

# Standard and Extended ACLs

- There are two types of IPv4 ACLs:
  - **Standard ACLs -** These permit or deny packets based only on the source IPv4 address.
    - ACLs numbered **1-99**, or **1300-1999** are standard ACLs
  - **Extended ACLs -** These permit or deny packets based on the source IPv4 address and destination IPv4 address, protocol type, source and destination TCP or UDP ports and more.
    - ACLs numbered **100-199**, or **2000-2699** are extended ACLs.

# Where to Place ACLs

- Every ACL should be placed where it has the greatest impact on efficiency.
- Extended ACLs should be located as close as possible to the source of the traffic to be filtered.
- Standard ACLs should be located as close to the destination as possible.

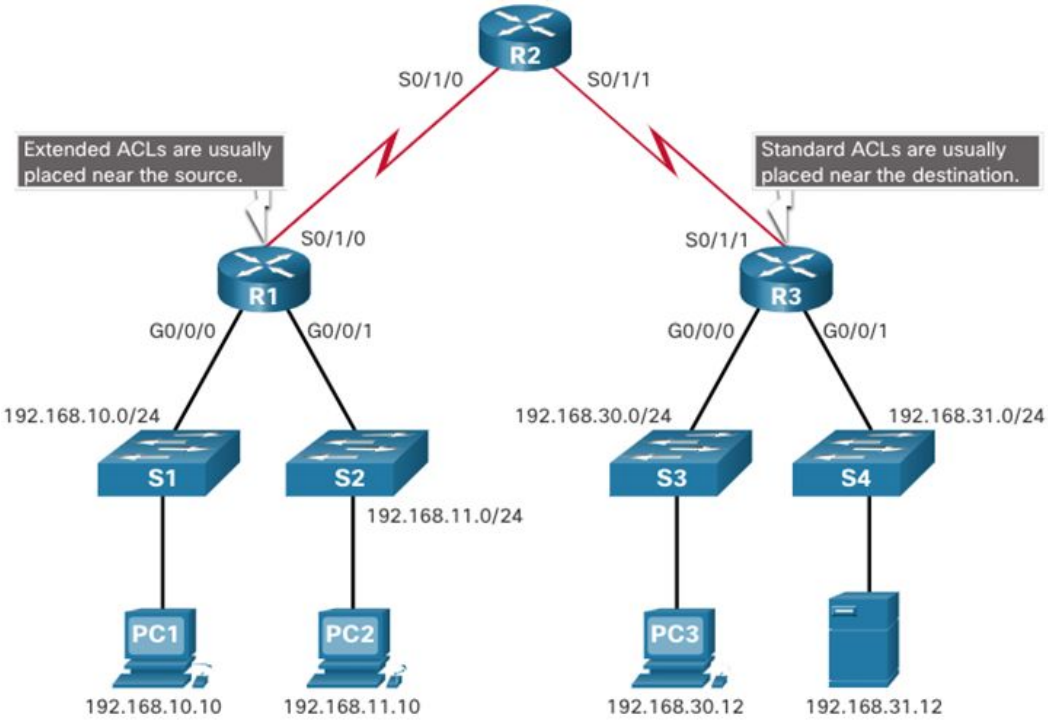

# Standard ACL Placement Example

In the figure, the administrator wants to prevent traffic originating in the 192.168.10.0/24 network from reaching the 192.168.30.0/24 network.

Following the basic placement guidelines, the administrator would place a standard ACL on router R3.

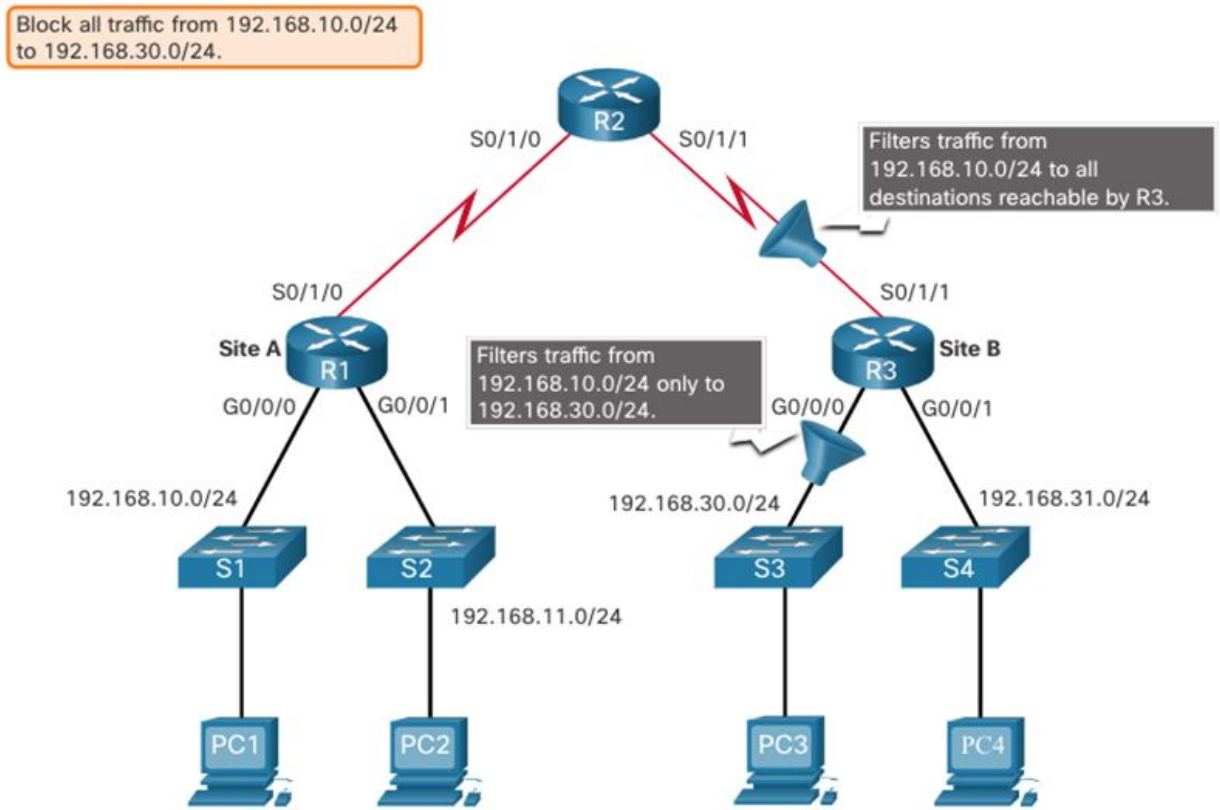

# Standard ACL Placement Example

There are two possible interfaces on R3 where a standard ACL can be applied:

- **R3 S0/1/1 Interface (Inbound)**
  - Applying the ACL **inbound** on the **S0/1/1** interface would block traffic from the **.10 network**.
  - However, this would also filter **.10 network traffic destined for the 192.168.31.0/24 (.31) network**, which is not the intended behaviour.
  - Conclusion: Not an ideal placement for the ACL.
- **R3 G0/0 Interface (Outbound)**
  - Applying the ACL **outbound** on the **G0/0 interface** ensures that traffic from the **.10 network is restricted as required**, while still allowing access to the .31 network.
  - This placement prevents unwanted traffic without affecting other networks reachable by R3.
  - Conclusion: Best placement for the standard ACL to meet the traffic filtering requirements.

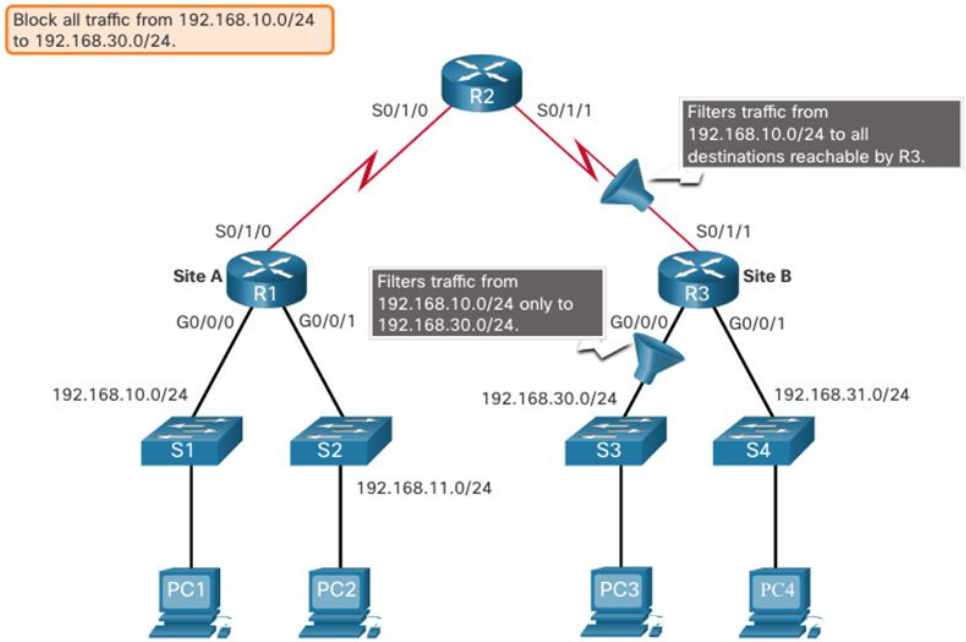

# Configure Standard IPv4 ACLs

To create a numbered standard ACL, use the **access-list** command.

```
Router(config)# access-list access-list-number {deny | permit | remark
text} source [source-wildcard] [log]
```

**Components:**

- **`access-list-number`** – Specifies the ACL number (1–99 for standard ACLs, 1300–1999 for extended range).
- **`deny | permit`** – Defines whether to block or allow traffic.
- **`remark text`** – (Optional) Adds a comment or description for documentation purposes.
- **`source`** – Specifies the source IP address.
- **`source-wildcard`** – (Optional) Wildcard mask to match multiple IP addresses.
- **`log`** – (Optional) Logs packets matching the rule.

Note: Use the **no access-list** *access-list-number* global configuration command to remove a numbered standard ACL.

# Configure Standard IPv4 ACLs

To create a numbered standard ACL, use the **access-list** command.

```
Router(config)# access-list access-list-number {deny | permit | remark
text} source [source-wildcard] [log]
```

**Example Usage:**

- **Deny traffic from 192.168.1.100:**

```
access-list 10 deny 192.168.1.100 0.0.0.0
```

- **Permit all other traffic:**

```
access-list 10 permit any
```

# Configure Standard IPv4 ACLs

To create a named standard ACL, use the **ip access-list standard** command.

- ACL names are alphanumeric, case sensitive, and must be unique.
- Capitalising ACL names is not required but makes them stand out when viewing the running-config output.

```
Router(config)# ip access-list standard MyACL
Router(config-std-nacl)# deny 192.168.1.100
Router(config-std-nacl)# permit any
Router(config-std-nacl)# exit
```

**Explanation:**

- **`ip access-list standard MyACL`** → Creates a standard ACL with the name "MyACL".
- **`deny 192.168.1.100`** → Blocks traffic from 192.168.1.100.
- **`permit any`** → Allows all other traffic.
- **`exit`** → Exits ACL configuration mode.

# Apply a Standard IPv4 ACL

After a standard IPv4 ACL is configured, it must be linked to an interface or feature.

- The **ip access-group** command is used to bind a numbered or named standard IPv4 ACL to an interface.
- To remove an ACL from an interface, first enter the **no ip access-group** interface configuration command.

```
Router(config-if)# ip access-group {access-list-number |
access-list-name} {in | out}
```

**Parameters:**

- **`access-list-number`** – Specifies a standard (1–99, 1300–1999) or extended (100–199, 2000–2699) ACL number.
- **`access-list-name`** – If using a named ACL, specify the name instead of a number.
- **`in`** – Applies the ACL inbound (filters traffic entering the interface).
- **`out`** – Applies the ACL outbound (filters traffic leaving the interface).

# Apply a Standard IPv4 ACL

```
Router(config-if)# ip access-group {access-list-number |
access-list-name} {in | out}
```

**Example 1: Applying a Numbered ACL**

```
Router(config)# interface GigabitEthernet0/0
Router(config-if)# ip access-group 10 in
Router(config-if)# exit
```

Applies **Standard ACL 10 inbound** on the **GigabitEthernet0/0** interface.

**Example 2: Applying a Named ACL**

```
Router(config)# interface GigabitEthernet0/1
Router(config-if)# ip access-group MyACL out
Router(config-if)# exit
```

Applies the **Named ACL "MyACL" outbound** on **GigabitEthernet0/1**.

# Exercise 1

Create a network based on the topology. Assign IP addresses to the PCs, laptop, servers, and router interfaces as depicted in the diagram. Next, configure a standard access control list (ACL) on the router to block traffic from the Laptop0 (IP: 168.142.10.5) to the server, while ensuring that all other devices can still communicate with the server.

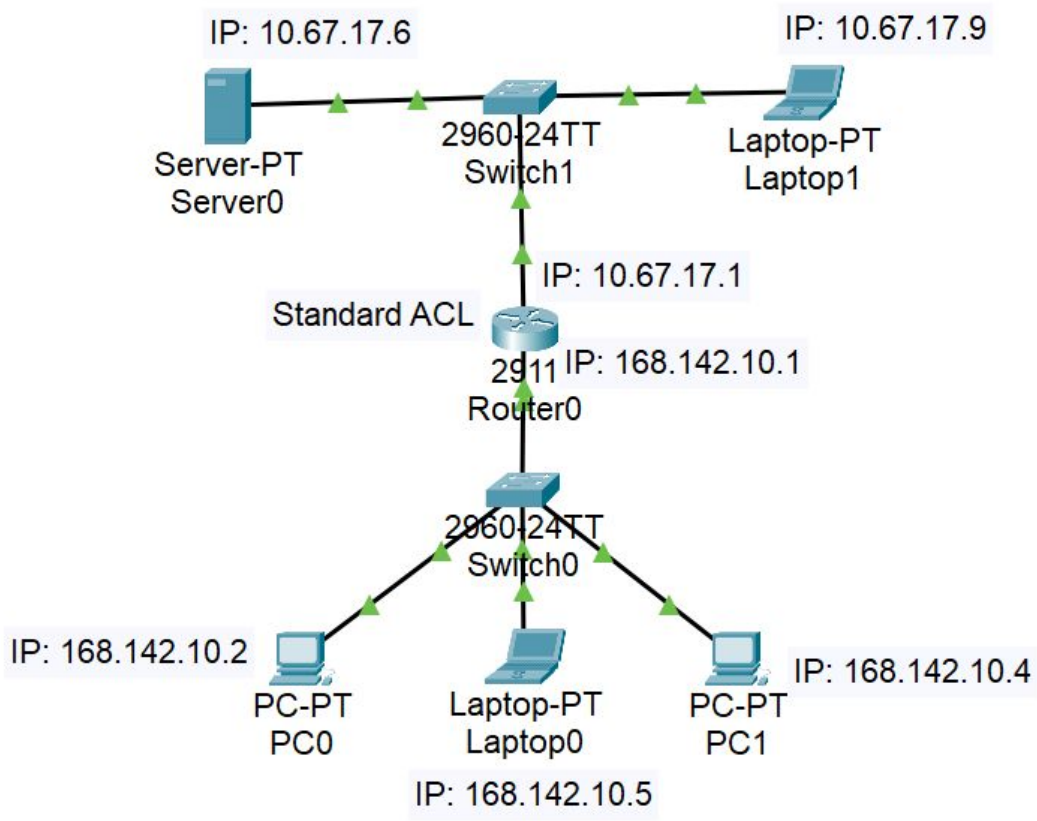

# Exercise 2

Create a network based on the topology. Assign IP addresses to the PCs, laptop, servers, and router interfaces as depicted in the diagram. Next, configure a standard access control list (ACL) on the router to block traffic from the PC1 (IP: 198.162.56.5) to the servers, while ensuring that all other devices can still communicate with the servers.

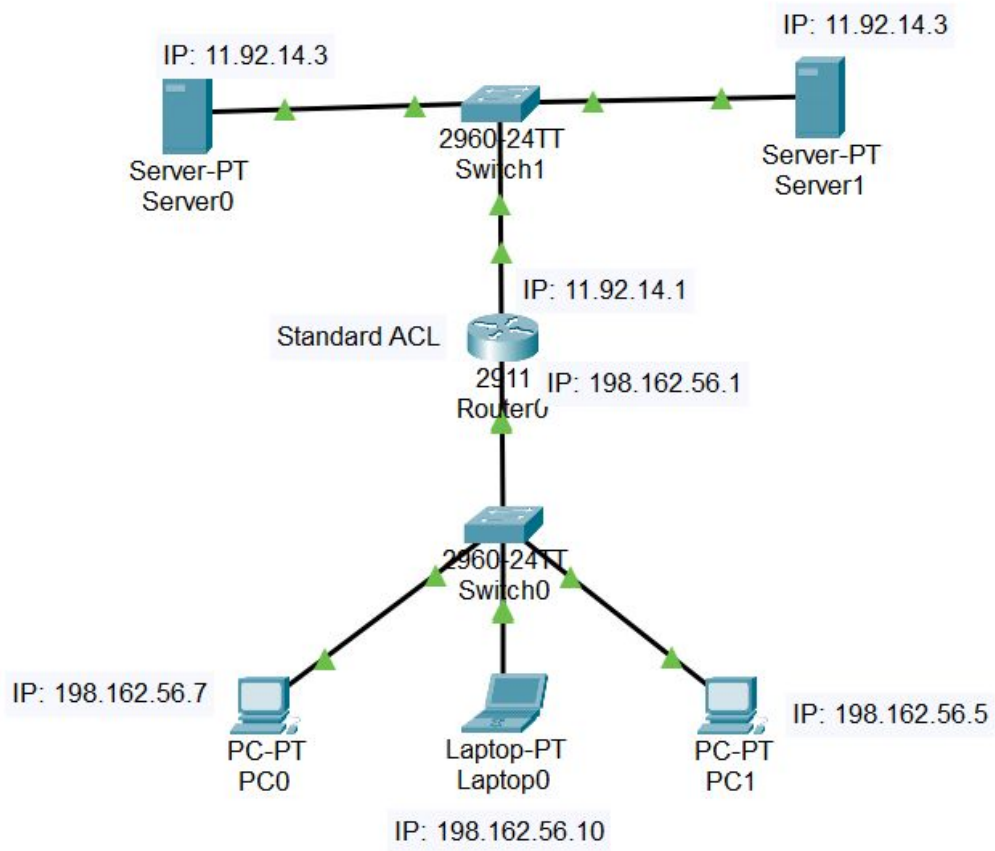

# Exercise 3

Create a network based on the topology. Assign IP addresses to the PCs, laptop, servers, and router interfaces as depicted in the diagram. Next, configure a standard access control list (ACL) on the router to block traffic from the PC0 (IP: 192.168.78.3) to both the servers, while ensuring that all other devices can still communicate with the servers.

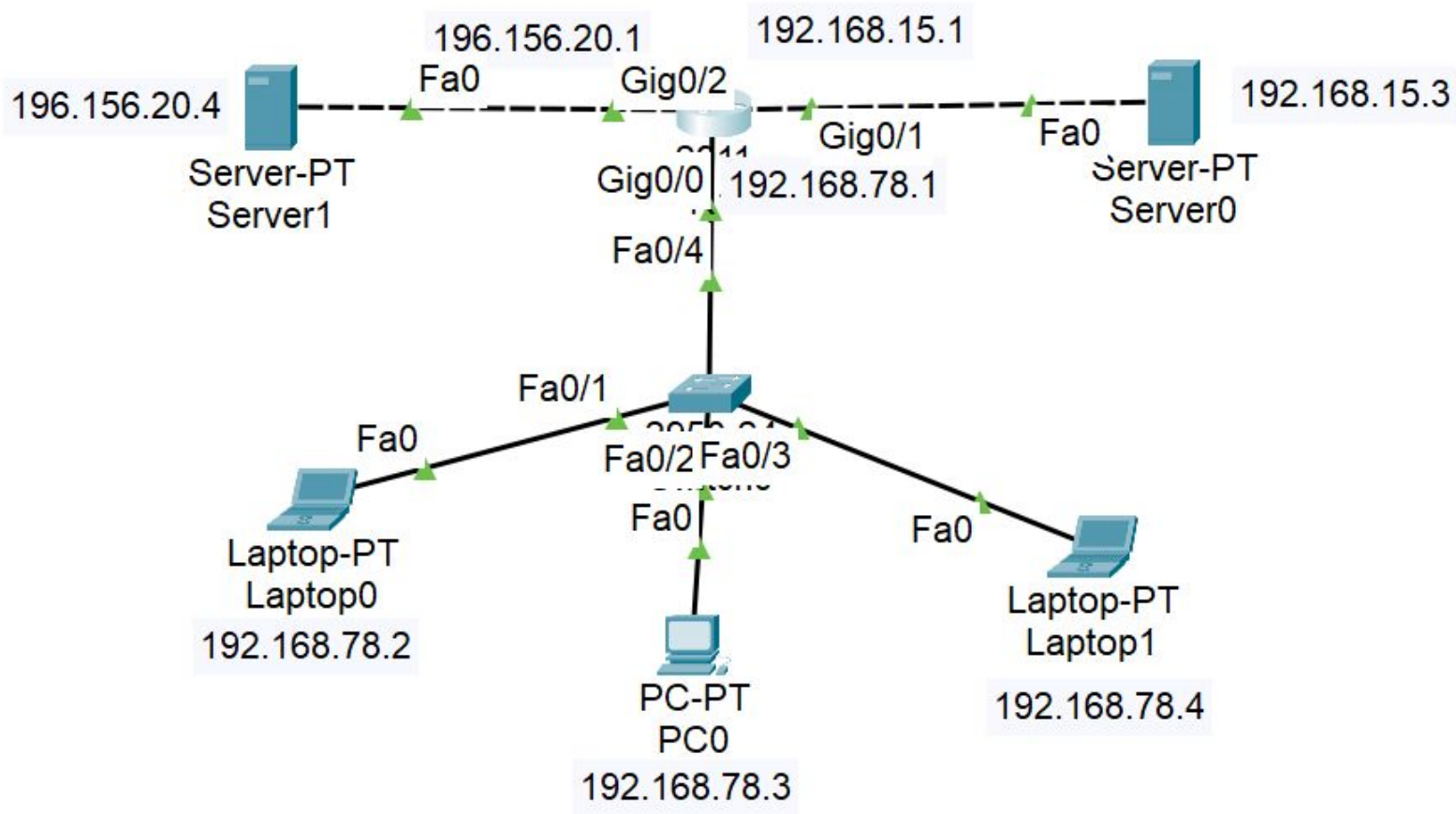

# Exercise 4
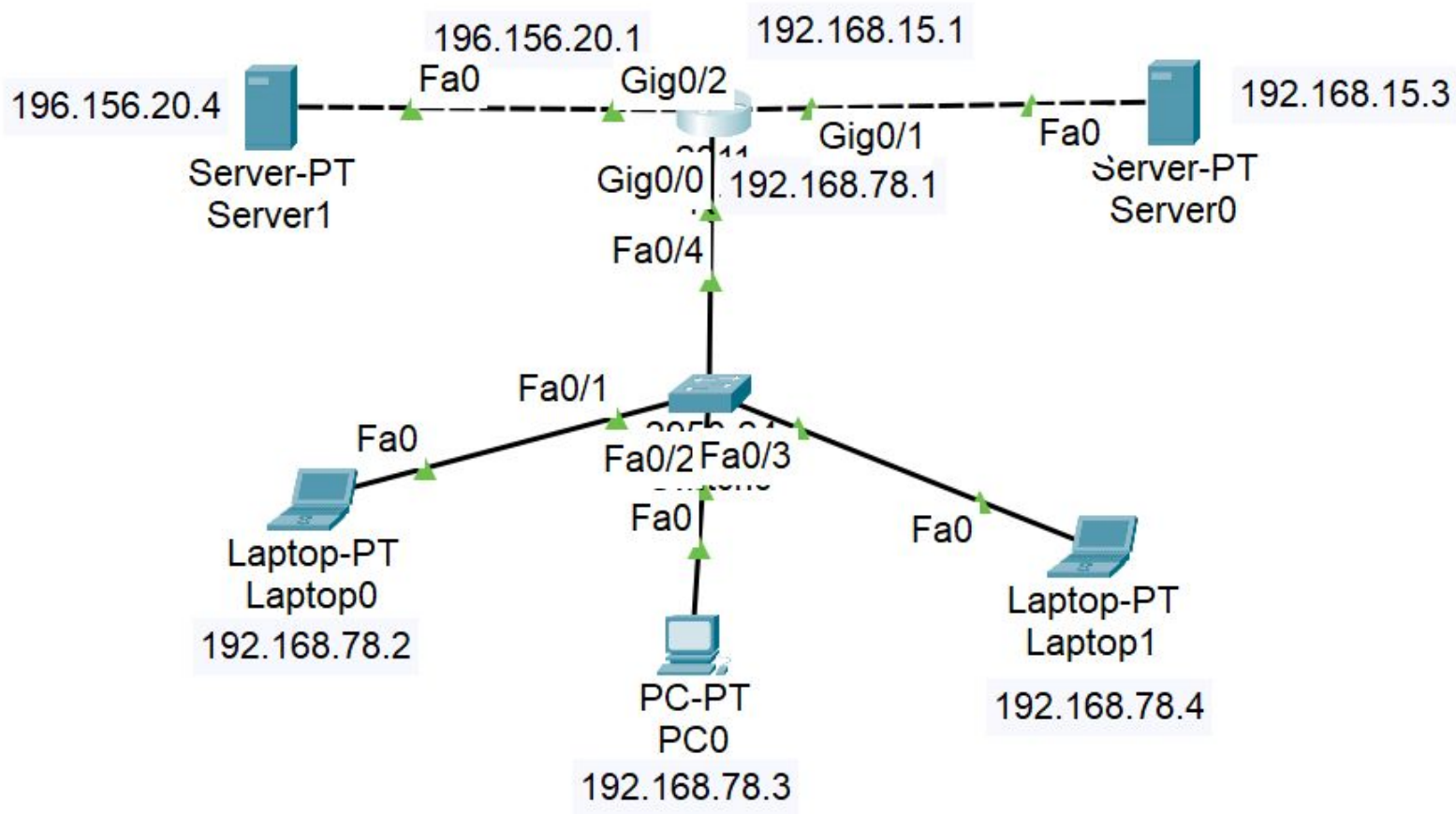
Create a network based on the topology. Assign IP addresses to the PCs, laptop, servers, and router interfaces as depicted in the diagram. Next, configure a standard access control list (ACL) on the router to block traffic from the PC0 (IP: 192.168.78.3) to the server 1 only, while ensuring that all other devices can still communicate with the servers.